AUTOMATISMI PER CANCELLI
AUTOMATIC ENTRY SYSTEMS

A·D·S AUTOMATIC DOOR SPECIALISTS

Puertas & Portones Automáticos, S.A. de C.V.

¡Nuestra pasión es la Solución!....

»OPERADOR ELECTROMECANICO PARA PUERTAS ABATIBLES Y CORREDIZAS TELESCOPICAS INDUSTRIALES MARCA RIB MOD.R-50.

CE

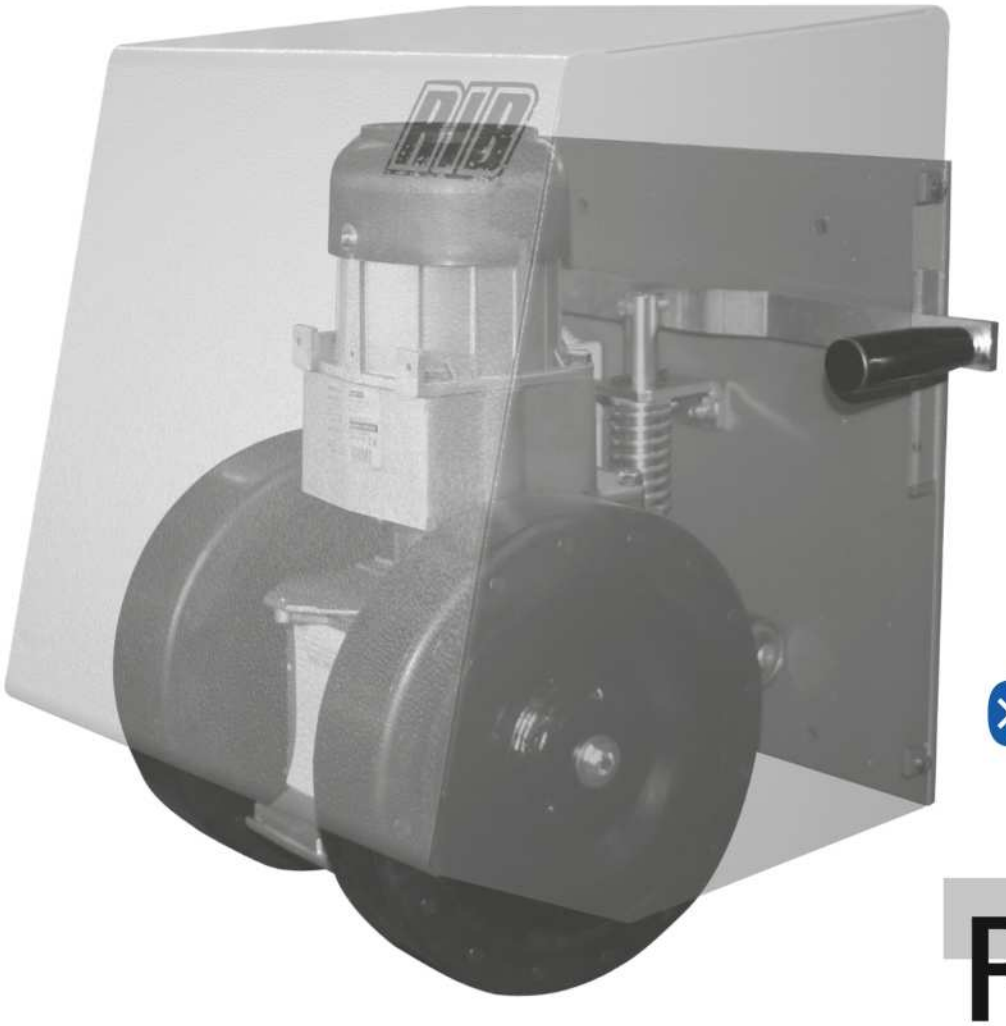

iOS

ANDROID

watchOS 4

R50

con B2-CRX

MANUAL DE INSTALACION

V07.20

(229) 288-1552
portonesautomaticos@adsver.com.mx
portonesautomaticos@prodigy.net.mx

RESIDENCIAL COMERCIAL INDUSTRIAL

MEMBER IDA International Door Association

»OPERADOR ELECTROMECANICO PARA PUERTAS ABATIBLES Y CORREDIZAS TELESCOPICAS INDUSTRIALES MOD.R-50.

IMPORTANT SAFETY INSTRUCTIONS FOR THE INSTALLATION

ATTENTION - FOR THE SAFETY OF PEOPLE IT IS IMPORTANT TO FOLLOW ALL THE INSTRUCTIONS
KEEP THESE INSTRUCTIONS WITH CARE

1° - If it is not forecast in the electric gearcase, install a switch of magneto thermic type upstream, (omni polar with minimum opening of the contacts of 3 mm) with a check of conformity to the international standards. Such device must be protected against the accidental lockup (for example by installing inside a locked board).

2° - For the section and the type of the cables RIB advices to use a cable of H05RN-F type with 1,5 sqmm minimum section and, however, to keep to the IEC 364 and installation standards in force in your country.

3° - Positioning of a possible couple of photoelectric cells: the radius of the photoelectric cells must be at a height of no more than 70 cm from the ground and at a distance not superior to 20 cm from the motion plane of the door. Their correct working must be verified at the end of the installation in accordance with the point D.3.2 of the EN 12453

4° - To fulfill the limits set by EN 12453, and in case the peak force exceeds the normative limit of 400 N it is necessary to have recourse to the active presence survey on the whole height of the door (up to max 2,5 m) - The photocells, in this case, must be applied in accordance with the point D.4.1 of the EN 12453.

N.B.: The earthing of the system is obligatory.

The data described in this handbook are purely a guide.
RIB reserves the right to change them in any moment.
Carry out the system in the respect of the standards and laws in force.

»OPERADOR ELECTROMECANICO PARA PUERTAS ABATIBLES Y CORREDIZAS TELESCOPICAS INDUSTRIALES MOD.R-50.

IMPORTANT SAFETY INSTRUCTIONS FOR THE INSTALLATION
ATTENTION - THE INCORRECT INSTALLATION CAN CAUSE SERIOUS DAMAGES
FOLLOW ALL INSTALLATION INSTRUCTIONS

1° - **This handbook is exclusively addressed to the specialized personnel** who knows the constructive criteria and the protection devices against accidents for motorized gates, doors and main doors (follow the standards and the laws in force).
2° - The installer will have to issue a handbook to the final user in accordance with the EN 12635.
3° - Before proceeding with the installation, the installer must forecast the risks analysis of the final automatized closing and the safety of the identified dangerous points (Following the standards EN 12453).
4° - Before installing the motion motor, the installer must verify that the gate is in good mechanical conditions and that it adequately opens and closes.
5° - The installer must install the member for the manual release at a height inferior to 1,8 m.
6° - The installer will have to remove possible impediments to the motorized motion of the gate (eg. door bolts, sliding bolts, door locks etc.)
7° - The installer will permanently have to put the tags warning against the deflection on a very visible point or near possible fixed controls.
8° - The wiring harness of the different electric components external to the operator (for example photoelectric cells, flashlights etc.) must be carried out according to the EN 60204-1.
9° - The possible assembly of a keyboard for the manual control of the movement must be done by positioning the keyboard so that the person operating it does not find himself in a dangerous position; moreover, the risk of accidental activation of the buttons must be reduced.
10° - Keep the automatism controls (push-button panel, remote control etc.) out of the children way. Command device for operating the motor (a switch manually closed) should be placed in area visible from the guided site and far from moving parts. It should be placed at least at 1,5 m height.
11° - this appliance can be used by children aged from 8 years and above and persons with reduced physical, sensory or mental capabilities or lack of experience and knowledge if they have been given supervision or instruction concerning use of the appliance in a safe way and understand the hazards involved
12° - children shall not play with the appliance
13° - cleaning and user maintenance shall not be made by children without supervision
14° - do not allow children to play with fixed controls. Keep remote controls away from children
15° - Fixed command devices should be installed in a well visible way.
16° - Before carrying out any installation, regulation or maintenance operation of the system, take off the voltage by operating on the special magneto thermic switch connected upstream.
17° - At the end of the installation, the installer will have to make sure that the parts of the door do not encumber streets or public sidewalks.

THE RIB COMPANY DOES NOT ACCEPT ANY RESPONSIBILITY for possible damages caused by the non observance during the installation of the safety standards and of the laws in force at present.

WEEE - Information for users

If the crossed-out bin symbol appears on the equipment or packaging, this means the product must not be included with other general waste at the end of its working life. The user must take the worn product to a sorted waste center, or return it to the retailer when purchasing a new one. Products for disposal can be consigned free of charge (without any new purchase obligation) to retailers with a sales area of at least 400 m2, if they measure less than 25 cm. An efficient sorted waste collection for the environmentally friendly disposal of the used device, or its subsequent recycling, helps avoid the potential negative effects on the environment and people's health, and encourages the re-use and/or recycling of the construction materials.

Materials must be disposed of in accordance with the regulations in force. Do not throw away your discarded equipment or used batteries with household waste. You are responsible for taking all your waste electrical and electronic equipment to a suitable recycling centre.

V07.20

AUTOMATISMI PER CANCELLI
AUTOMATIC ENTRY SYSTEMS

AUTOMATIC DOOR SPECIALISTS

Puertas & Portones Automáticos, S.A. de C.V.
¡Nuestra pasión es la Solución!....

»OPERADOR ELECTROMECANICO PARA PUERTAS ABATIBLES Y CORREDIZAS TELESCOPICAS INDUSTRIALES MOD.R-50.

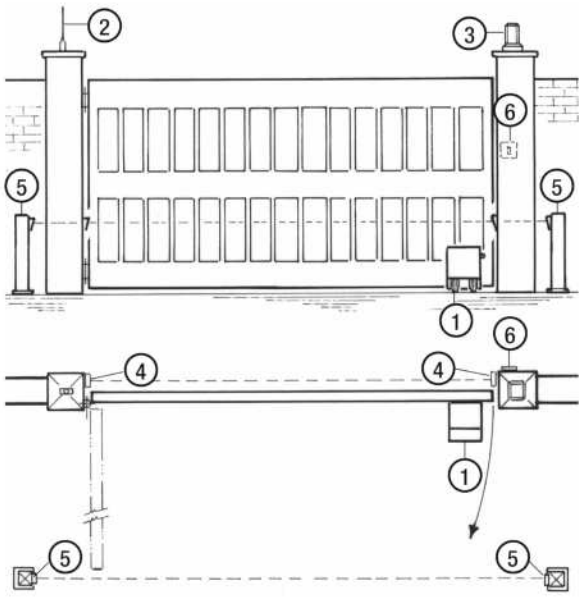

1 - R50 operator
2 - Radio antenna
3 - Blinker
4 - Photoelectric cells (external)
5 - Photoelectric cells (internal)
6 - Key selector

TECHNICAL FEATURES

Gearmotor for operating industrial swing gates with overall maximum weight of 2000 kg.

The R50 is an irreversible electric gearmotor with adjustable drive force, regulated by changing the pressure exerted by the drive wheels on the ground.

The drive wheels are able to run over surface irregularities of up to 3 cm (approx.), because the gearmotor unit slides along a vertical track. The pressure setting between the drive wheels and the ground can vary from 30 to 130 kg maximum and is maintained by an adjustable spring.

TECHNICAL DATA		R50	
Max. leaf length	m	10	
Max. leaf weight	kg	2000	
Average opening time 90°	s	78	
Max torque	Nm	57	
Operating speed	m/s	0,180 (50Hz) - 0,216 (60Hz)	
Power supply		**230V~ 50Hz**	**220V~ 60Hz**
Motor capacity	W	437	511
Power absorbed	A	1,96	2,32
Capacitor	µF	16	
230/50-60 Normative cycles	n°	3 - 78s/2s	
Daily cycles suggested	n°	300	
Service	%	60	
Consecutive cycles guaranteed	n°	4/78s	
Grease		COMLUBE LHITGREASE EP/GR.2	
Actuator weight	kg	45	
Operating temperature	°C	-10 ÷ +55	
Protection grade	IP	54	

1

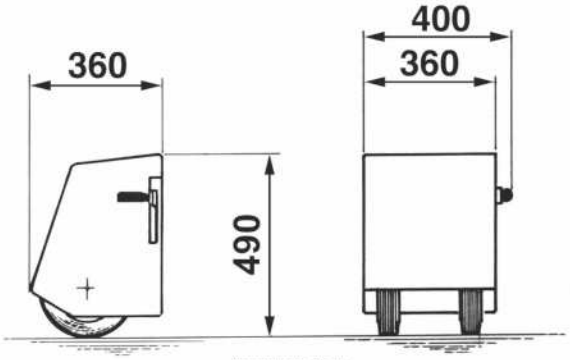

Measurements in mm

V07.20

(229) 288-1552
portonesautomaticos@adsver.com.mx
portonesautomaticos@prodigy.net.mx

RESIDENCIAL COMERCIAL INDUSTRIAL

MEMBER IDA International Door Association

»OPERADOR ELECTROMECANICO PARA PUERTAS ABATIBLES Y CORREDIZAS TELESCOPICAS INDUSTRIALES MOD.R-50.

PRE-INSTALLATION CHECKS

The leaf must be fixed firmly on the hinges to the pillars, must not be flexible during the movement and must move without frictions. The ground on which the R50 wheels run must be solid and compact with minimum gradient.

Gate features must be uniformed with the standards and laws in force. The door/gate can be automated only if it is in a good condition and its conditions comply with the EN 12604 norm.

- The door/gate leaf does not have to have a pedestrian opening. In the opposite case it is necessary to take the appropriate steps, in accordance with EN 12453 norm point 6.5.1 (for instance; by preventing the operation of the motor when the pedestrian opening is opened, by installing a safety microswitch connected with the control panel).
- No mechanical stop shall be on top of the gate, since mechanical stops are not safe enough.

Parts to install according to EN 12453 standard			
COMMAND TYPE	USE OF THE SHUTTER		
	Skilled persons (out of public area*)	Skilled persons (public area)	Not skilled persons
Hold-to-run operation	A	B	Not possible
Impulsive - in sight (e.g. push-button)	C or E	C or E	C and D, or E
impulsive - out of sight (e.g. remote)	C or E	C and D, or E	C and D, or E
automatic	C and D, or E	C and D, or E	C and D, or E

* a typical example are those doors which do not have access to any public way
A: Hold-to-run operation made by push-button ex: code ACG2013
B: Hold-to-run operation made by key selector ex: code ACG1010
C: Adjustable power of the motor or photocells to respect impact forces as indicated in Annex A
D: Safety strips and/or other additional devices to reduce the probability of contact with the door.
E: Devices installed in such a way that a person can not be touched by the door.

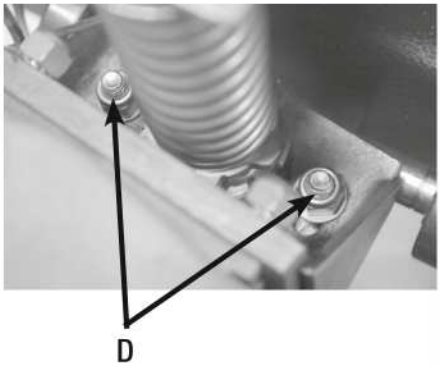

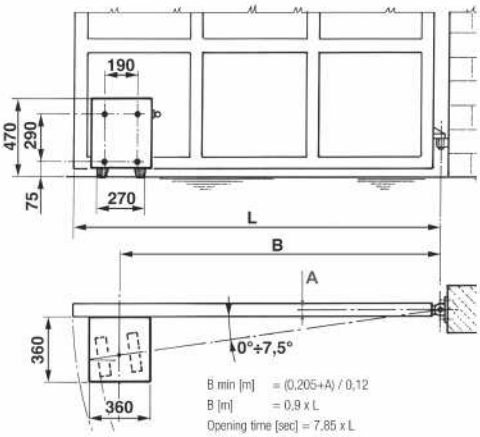

R50 INSTALLATION

The ground should be compact and without any excessive differences in level along the tract destined for wheel run.
Position the gate about halfway, secure the gearmotor plate to the corner of the gate leaf and ensure that the drive wheels rest on the ground.
Drill four Ø 6.5 mm holes in the leaf, then tap them with M8 male threading.
Insert four M8 bolts and tighten with a No. 13 wrench.
Remove the elastic pin which prevents the wheels from turning (Fig. 6).
If the drive wheels slide on the ground during operation, turn the set screw on the spring

»OPERADOR ELECTROMECANICO PARA PUERTAS ABATIBLES Y CORREDIZAS TELESCOPICAS INDUSTRIALES MOD.R-50.

clockwise to increase the pressure between the wheels and the ground.
To reduce wheel wear during operation, loosen nuts (D) with a No. 13 wrench and tilt the rubber wheels so that the axles coincide with the center of the gate leaf pivot point.
The wheels may be tilted by 0° to 7.5°. Retighten the two nuts.
The R50 is equipped with two waterproof, armored limit stops to electrically control gate travel.
The limit stops should be positioned in accordance with installer requirements.

R50 APPLICATION ON MULTIPLE PANEL DOORS

In this case the R50 must be installed on the first leaf.

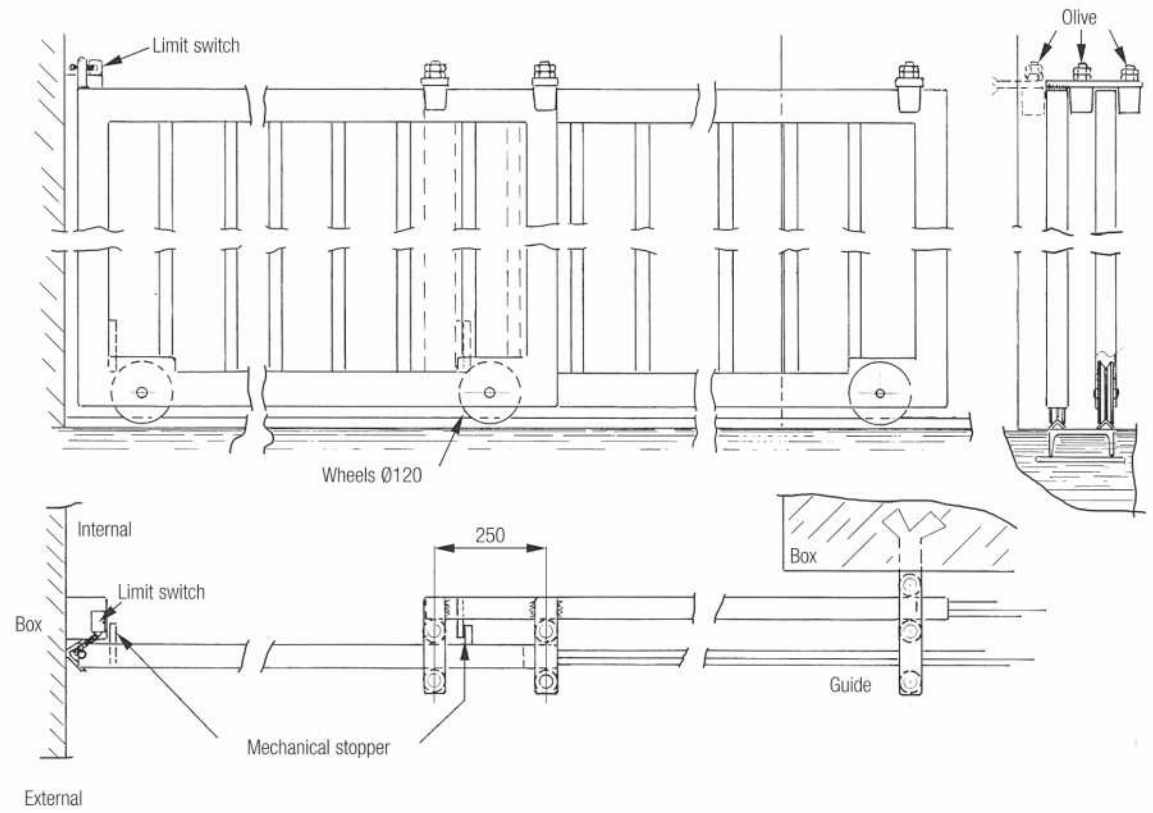

4

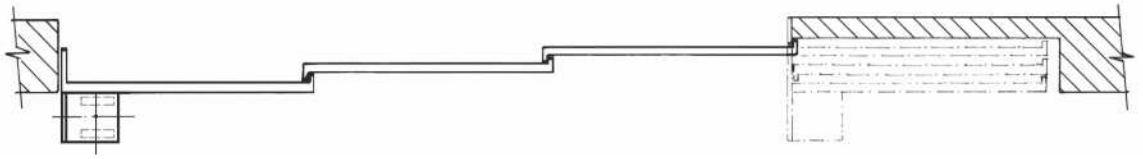

5

»OPERADOR ELECTROMECANICO PARA PUERTAS ABATIBLES Y CORREDIZAS TELESCOPICAS INDUSTRIALES MOD.R-50.

EMERGENCY RELEASE

To be undertaken after disconnecting power supply.

In the event of a power failure, raise the side handle to lift the wheels off the ground.

In order to carry out the manual operation of the gate leaf the followings must be checked:

- That the gate is endowed with appropriate handles;
- That these appropriate handles are placed so to avoid safety risks for the operator;
- That the physical effort necessary to move the gate leaf should not be higher than 225 N, for doors/gates for private dwellings, and, 390 N for doors/gates for commercial and industrial sites (values indicated in 5.4.5 of the EN 12453 norm

A : Maximum stroke -2,4 cm / +1,6 cm during movement (holes or uneven ground)
B : Remove the elastic pin, after the unit is secured, to release the spring.
C : Spring set screw.

MAINTENANCE

To be undertaken by specialized staff after disconnecting power supply.

Clean the wheel contact surfaces carefully once a week.

Check wheel/ground pressure and condition of motor wheels every six months.

The motor should be overhauled every two years.

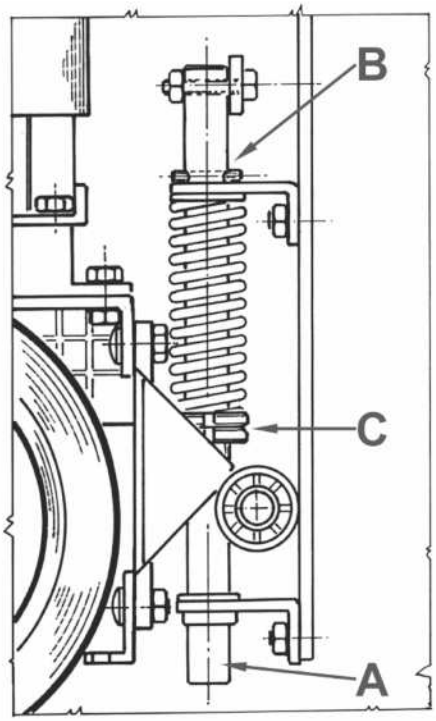

(229) 288-1552
portonesautomaticos@adsver.com.mx
portonesautomaticos@prodigy.net.mx

AUTOMATISMI PER CANCELLI
AUTOMATIC ENTRY SYSTEMS

A·D·S AUTOMATIC DOOR SPECIALISTS

Puertas & Portones Automáticos, S.A. de C.V.
¡Nuestra pasión es la Solución!....

»OPERADOR ELECTROMECANICO PARA PUERTAS ABATIBLES Y CORREDIZAS TELESCOPICAS INDUSTRIALES MOD.R-50.

ELECTRIC CONNECTIONS

cod. AC08074

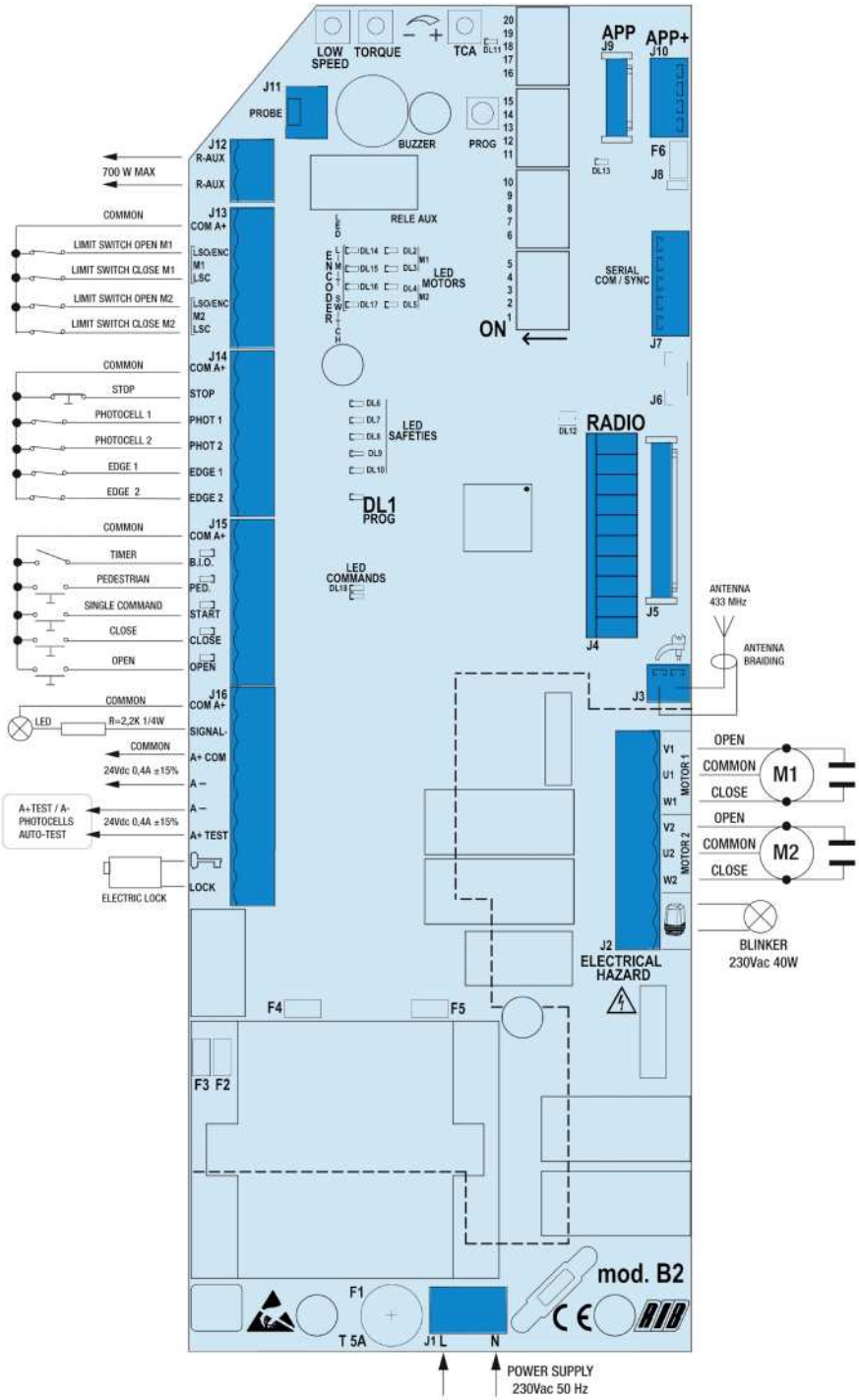

V07.20

(229) 288-1552
portonesautomaticos@adsver.com.mx
portonesautomaticos@prodigy.net.mx

RESIDENCIAL COMERCIAL INDUSTRIAL

MEMBER IDA International Door Association

»OPERADOR ELECTROMECANICO PARA PUERTAS ABATIBLES Y CORREDIZAS TELESCOPICAS INDUSTRIALES MOD.R-50.

POINT A - CONTROL PANEL FEATURES

J1	N -L	Main power supply 230 Vac 50/60 Hz (120V/60Hz upon request)
J2	U1	MOTOR 1 COMMON CONNECTION
	V1 - W1	MOTOR 1 PHASES AND CAPACITOR CONNECTIONS
	U2	MOTOR 2 COMMON CONNECTION
	V2 - W2	MOTOR 2 PHASES AND CAPACITOR CONNECTIONS
		Flashing light (max 40W)
J3		Radio Antenna 433MHz
J4	RADIO	Connector for radio receiver RIB, 24 Vdc supply
J5	RADIO	Connector for radio module ACG8069
J6		**reserved**
J7	SERIAL COM/SYNC	Connector for serial connection
J8		**RS485 termination of J10**
J9	APP	Connector for APP Card
J10	APP+	Connector for APP+ card
J11	PROBE	Terminal block to connect the heater sensor only for operators KING ICE and KING EVO ICE
J12	R-AUX	Auxiliary relay contact (NO) Max 700 W
J13	COM A+	Common contacts / Positive 24 Vdc
	LSO M1/ENC	Opening limit switch M1
	LSC M1	Closing limit switch M1
	LSO M2/ENC	Opening limit switch M2
	LSC M2	Closing limit switch M2
J14	COM A+	Common contacts / Positive 24 Vdc
	STOP	STOP impulse contact (NC)
	PHOT 1	Photocells contact 1 (NC)
	PHOT 2	Photocells contact 2 (NC)
	EDGE 1	Edge 1 contact (NC)
	EDGE 2	Edge 2 contact (NC)
J15	COM A+	Common contacts / Positive 24 Vdc
	B.I.O.	Contact (NO) dedicated to a clock
	PED.	Pedestrian opening contact (NO)
	START	Single pulse contact (NO)
	CLOSE	Closing impulse contact (NO)
	OPEN	Opening impulse contact (NO)
J16	COM A+	Common contacts / Positive 24 Vdc
	SIGNAL -	Gate open state (24 Vdc 3 W max)
	A+ COM	+ 24Vdc accessories power supply
	A -	- 24Vdc accessories power supply
	A+ TEST	+ 24Vdc photocells self-test power supply
	LOCK	Electric lock connection (MAX 15W 12V)
	PROG	Programming button
	TCA	Trimmer for automatic closing time adjustment (DISABLED DEFAULT AND DL11 LED OFF)
	TORQUE	Electronic torque regulator
	LOW SPEED	Electronic regulator for low speed on approach motor (See chart 1)
F1	T 5A	Motors protection fuse

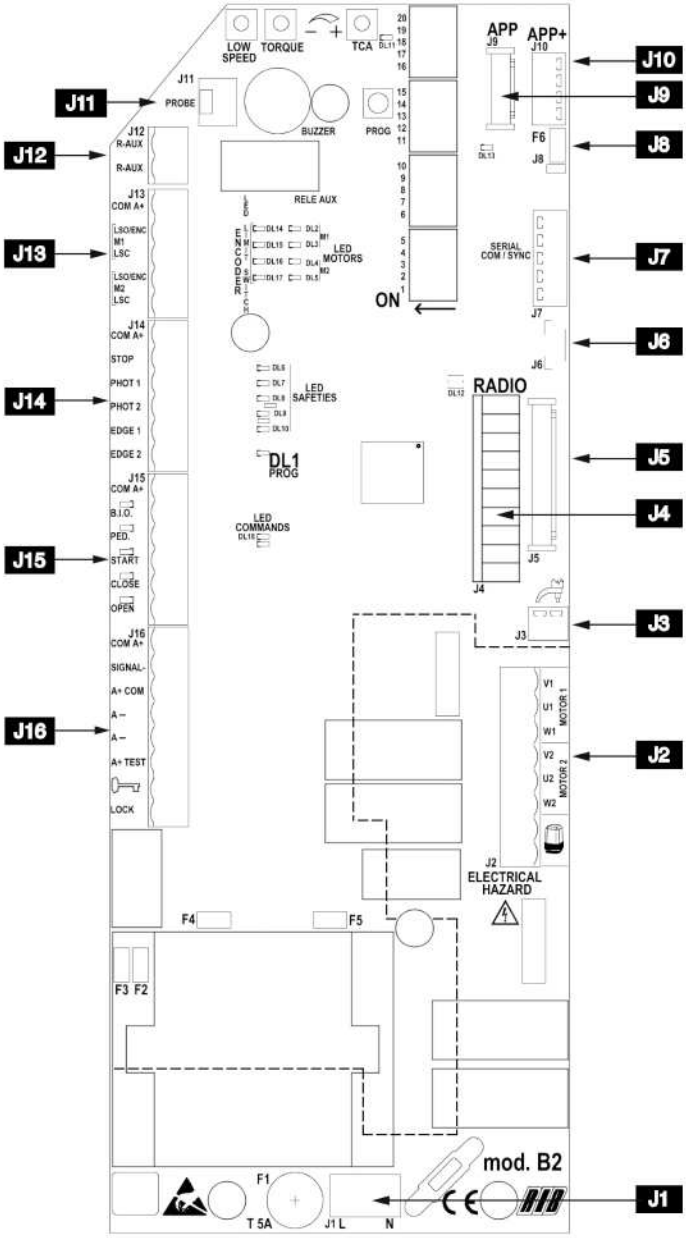

»OPERADOR ELECTROMECANICO PARA PUERTAS ABATIBLES Y CORREDIZAS TELESCOPICAS INDUSTRIALES MOD.R-50.

POINT B - SETTINGS

DIP 1 (ON) MOTORS ROTATION DIRECTION CHECK (See Point C)
Dip 2 (ON) - setting the times (point D)
Dip 2-1 setting the pedestrian opening times (point E)
Dip 1-2 save/delete radio control codes for total opening (point F)
Dip 1-3 save/delete radio codes for pedestrian opening (point G)
Dip 1-2-3 save/delete radio codes for relay r-aux command (point H)

DIP SWITCHES CONTROL

DIP 4 Photocells always active (OFF) - Photocells active only during closing (ON)
DIP 5 Pre-blinking (ON) - Normal blinking (OFF)
DIP 6 Single pulse command (START) and RADIO - step-by-step (ON) - automatic (OFF)
DIP 7 Photocells AUTO-TEST activation (ON-activated).
DIP 8 Electric lock activation (ON-activated)
DIP 9 Electric lock pulse release (ON-activated)
DIP 10 Motors manual release facilitation (ON-activated)
DIP 11 Electric lock pulse engagement (ON-activated)
DIP 12 Selection of 1 or 2 motor operation (default OFF 2 motors)
DIP 13 Activate the radio system SUN/MOON (ON) - SUN-PRO (OFF)
DIP 14 Timed operation (OFF) - Operation with limit switches (ON)
DIP 15 Slowdown (ON - activated)
DIP 16 Contactors management (ON - activated)
DIP 17 Encoder management (ON - activated)

TYPE OF MOTOR	CODE	DIP 18	DIP 19	DIP 20
R50	AA21580	OFF	ON	ON

TORQUE TRIMMER - Electronic regulator for motor torque

Adjustment of motor torque is carried out using the TORQUE Trimmer which varies the output voltage to the head/s of the motor/s (turn clockwise to increase torque).
This torque control is activated after 2 seconds form any manoeuvre begging, whereas the motor is turned on at full power to guarantee the starting at the manoeuvre begging.
PAY ATTENTION: IF THE TORQUE TRIMMER SETTING IS CHANGED, IT IS PREFERABLE TO REPEAT THE TIME PROGRAMMING.

LOW SPEED TRIMMER - Electronic regulator for low speed on approach

Adjustment of low speed is carried out using the LOW SPEED Trimmer which varies the output voltage to the head/s of the motor/s (turn clockwise to increase speed). Adjustment is carried out to establish the correct speed at the completion of opening and closing, depending on the structure of the gate, or if there is any light friction that could compromise the correct working of the system. The low speed is activated (**DIP 15** ON) when the gate leaf is 0.50-0.60 meters away from the complete close or open position.

TCA TRIMMER - AUTOMATIC CLOSING pause time regulator for TOTAL or PEDESTRIAN openings
default NOT ACTIVATED and LED DL11 OFF
(trimmer fully rotated counterclockwise)

This trimmer makes it possible to adjust the pause time for total or pedestrian automatic closing. Only with gate completely open (total) or partially open (pedestrian) and LED DL11 ON (trimmer rotated clockwise to activate the feauture).
The pause time (for a totally opened gate) can be adjusted from a minimum of 2 s up to a maximum of 2 minutes.
The pause time (for gate open with PED. control) can be adjusted from a minimum of 2 seconds to a maximum of 30 seconds.
Ex: With TCA trimmer setted halfway, you will have 1 minute pause after the total opening and 15 seconds of pause after the pedestrian opening prior to have the auto-close of the gate.

R-AUX - AUXILIARY RELAY CONTACT (NO)

By default this relay is set as courtesy light (max 700 W - 3 A - 230 Vac) to operate 3 minutes at each command, with time renewed at each command.
You can activate the R-AUX contact by TRANSMITTER by performing the memorization procedure described in point H.

LED WARNING

DL1	PROG programming activated	(red)
DL2	M1 - gate opening	(green)
DL3	M1 - gate closing	(red)
DL4	M2 - gate opening	(green)
DL5	M2 - gate closing	(red)
DL6	STOP command (NC)	(red)
DL7	PHOTO 1 contact (NC)	(red)
DL8	PHOTO 2 contact (NC)	(red)
DL9	EDGE 1 contact (NC)	(red)
DL10	EDGE 2 contact (NC)	(red)
DL11	TCA - automatic closure time enabled	(red)
DL12	Remotes programming enabled	(two colors)
DL13	Card managed by APP	(blue)
DL14	Opening limit switch LSO M1/ENC	(red)
DL15	Closing limit switch LSC M1	(red)
DL16	Opening limit switch LSO M2/ENC	(red)
DL17	Closing limit switch LSC M2	(red)
DL18	PROG and RADIO (on MOLEX connector) commands	(green)
B.I.O	Clock command (NO)	(green)
PED.	Pedestrian command (NO)	(green)
START	Single impulse command (NO)	(green)
CLOSE	CLOSE command (NO)	(green)
OPEN	OPEN command (NO)	(green)

V07.20

»OPERADOR ELECTROMECANICO PARA PUERTAS ABATIBLES Y CORREDIZAS TELESCOPICAS INDUSTRIALES MOD.R-50.

C - MOTOR/S ROTATIONAL DIRECTION CONTROL

1 - Unlock the operators with the Manual Release - swing open the leaves about halfway and lock again the operators.

2 - Turn **DIP 1** to ON position The red LED DL1 starts blinking.

3 - Press the PROG button and hold it - When GREEN LEDS DL2 and DL4 are on, the gate leaves are opening (with a phase shift of 2 seconds). Check the leaves swinging and the opening mechanical stopper position (movement is now performed in "man present" mode, open-close-open-etc.).

If any of the leaf closes instead of opening, release PROG button, turn off the main power and reverse the two phase wires (V1/2 and W1/2) of the relevant motor/s.

4 - Press the PROG button and hold it to CLOSE completely the gate. When RED LEDS DL5 and DL3 are on, the gate leaves are closing (with a phase shift of 2 seconds). Check leaves swinging and the closing mechanical stopper position.

5 - After 2 seconds motor starting and for the next 10 seconds motor working, the torque controls automatically activated. Set the motor torque by the TORQUE Trimmer/s which varies the output voltage to the motor/s (turn clockwise to increase the torque).

6 - After other 10 seconds motor working, the low speed controls automatically activated (**DIP 15** ON). Set the motor low speed by the LOW SPEED Trimmer to select the gate leaf low speed in approaching.

7 - Close completely the gate.

8 - Turn **DIP 1** to OFF position, LED DL1 turns off.

During Point C procedure, safety devices (photocells and safetystrip) are not active.

»OPERADOR ELECTROMECANICO PARA PUERTAS ABATIBLES Y CORREDIZAS TELESCOPICAS INDUSTRIALES MOD.R-50.

D - TIMES PROGRAMMING

N.B.: DURING PROGRAMMING THE SAFETY DEVICES ARE ACTIVE AND THEIR INTERVENTION STOPS PROGRAMMING (THE DL1 LED FROM FLASHING REMAINS ON FIXED) AND THE BUZZER PLAYS FOR 10 SECONDS. TO REPEAT THE PROGRAMMING PROCEDURE POSITION THE DIP 1 AND DIP 2 TO OFF, CLOSE THE GATE THROUGH PROCEDURE «CHECKING THE DIRECTION OF MOTOR ROTATION» AND REPEAT THE PROGRAMMING OF THE CHOICE.

N.B.: The deceleration is automatically determined during the times programming, and is activated about 50÷60 cm before the end of opening or end of closing.

- FOR 2 MOTORS WITH ELECTRIC LIMIT SWITCHES - DIP 12 OFF AND DIP 14 ON

1 - The gate must be completely closed.
2 - Set **DIP 2** to ON => LED DL1 will flash briefly.
3 - Press the PROG./RADIO/OPEN/START button => M1 opens.
When the opening limit switch LSO M1 is pressed, M1 stops and M2 opens.
When the opening limit switch LSO M2 is pressed. M2 stops.
4 - Press the PROG./RADIO/OPEN/START button => M2 closes.
5 - Press the PROG./RADIO/OPEN/START button => M1 closes and determine the phase displacement between M2 and M1.
When the LSC M2 and LSC M1 limit switches are pressed, the motors are switched off.
At the same time the programming LED DL1 stops flashing, signaling the output from the learning procedure.
From this moment the safety devices or other gate commands will work normally (inversions, stops, alarms, etc.).
6 - AT THE END OF PROGRAMMING, RESET THE **DIP 2** IN OFF POSITION.

- FOR 1 MOTOR WITH ELECTRIC LIMIT SWITCHES - DIP 12 ON and DIP 14 ON

1 - The gate must be completely closed.
2 - Set **DIP 2** to ON => LED DL1 will flash briefly.

»OPERADOR ELECTROMECANICO PARA PUERTAS ABATIBLES Y CORREDIZAS TELESCOPICAS INDUSTRIALES MOD.R-50.

3 - Press the PROG./RADIO/OPEN/START => M1 button. The M1 LSO opening limit switch will stop M1.

4 - Press the PROG./RADIO/OPEN/START => M1 button to close. The LSC M1 limit switch will stop M1.

At the same time the led DL1 will stop flashing signaling the exit from the learning procedure. From this moment the safety devices or other gate commands will work normally (inversions, stops, alarms, etc.).

5 - AT THE END OF PROGRAMMING, RESET THE **DIP 2** IN OFF POSITION.

- PEDESTRIAN OPENING

The gate must be fully closed.

1 - Turn **DIP2 to ON** position => the LED DL1 starts blinking quickly.

2 - Immediately, turn also **DIP1 to ON** position, the LED DL1 starts blinking slowly.

3 - **Press the pedestrian pushbutton (COM A+/PED.)**, motor M1 opens

4 - When the motor M1 leaf is opened enough for the pedestrian crossing, press the pedestrian pushbutton to stop the travel (thus defining the opening stroke of motor M1).

5 - **Press the pedestrian pushbutton (COM A+/PED.)**, M1 closes.

6 - Turn **DIP1 to OFF** position.

7 - Turn **DIP2 to OFF** position.

F - RADIO CODES PROGRAMMING PROCEDURE FOR TOTAL OPENING (1000 CODES MAX) - with radio module ACG8069

ATTENTION: before storing the radio codes, use **DIP 1**3 to select which transmitters to use:

DIP 13 OFF: SUN-PRO variable code transmitters can be memorized:

SUN-PRO 2CH 2-channel - red keys and white led cod. ACG6210

SUN-PRO 4CH 4-channel - red keys and white led cod. ACG6214

SUN-PROX 2CH 2-channel - red keys and yellow led cod. ACG6220

SUN-PROX 4CH 4-channel - red keys and yellow led cod. ACG6224

»OPERADOR ELECTROMECANICO PARA PUERTAS ABATIBLES Y CORREDIZAS TELESCOPICAS INDUSTRIALES MOD.R-50.

DIP 13 ON (default): You can store transmitters with fixed code SUN and MOON:
SUN 2CH 2-channel - blue keys and white led cod. ACG6052
SUN 4CH 4-channel - blue keys and white led cod. ACG6054
SUN CLONE 2CH 2-channel - blue keys and yellow led cod. ACG6056
SUN CLONE 4CH 4-channel - blue keys and yellow led cod. ACG6058
MOON 2CH 2-channel - black keys and yellow LED cod. ACG6081
MOON 4CH 4-channel - black keys and yellow LED cod. ACG6082
ATTENTION: it is not possible to memorize at the same time transmitters with fixed code and transmitters with variable code.

Programming can be done only when the gate is stationary.

1 - First set **DIP 1** to ON and then **DIP 2** to ON. The LED DL12 flashes red for 10 seconds.
2 - Press the TRANSMITTER button (usually channel A) within the allotted 10 seconds. If the remote is memorized properly LED DL12 blinks green and a buzzer tone confirms the correct memorization. The 10 seconds for programming the codes are automatically renewed, with LED DL12 which flashes red, in order to store the next transmitter.
3 - To finish programming, wait 10 seconds, or press the PROG button briefly. LED DL12 stops flashing.
4 - Re-set **DIP 1** to OFF and **DIP 2** to OFF.
5 - End of procedure.

ALL RADIO CODES FOR TOTAL OPENING CANCELLATION PROCEDURE

Cancellations can only be performed when gate is stationary.

1 - Set **DIP 1** to ON and then **DIP 2** to ON.
2 - LED DL12 flashes red for 10 seconds.
3 - Press and hold the PROG button for 5 seconds. Memory cancellation is indicated by two green flashes of LED DL12 and 2 tones of the buzzer.
4 - LED DL12 flashes red again for 10 seonds and you can add new codes as shown above.
5 - Re-set **DIP 1** to OFF and **DIP 2** to OFF.
6 - End of procedure.

RADIO CODES MEMORY FULL INDICATOR (FOR TOTAL OPENING)

Indication is visible only when gate is stationary.

1 - Set **DIP 1** to ON and then **DIP 2** to ON.
2 - The LED DL12 flashes green 6 times when the memory is full (1000 codes). Now LED DL12 blinks red for 10 seconds enabling possible cancellation of all codes.
3 - Re-set **DIP 1** to OFF and **DIP 2** to OFF.
4 - End of procedure.

»OPERADOR ELECTROMECANICO PARA PUERTAS ABATIBLES Y CORREDIZAS TELESCOPICAS INDUSTRIALES MOD.R-50.

G - RADIO CODES PROGRAMMING PROCEDURE FOR PEDESTRIAN OPENING (1000 CODES MAX) - with radio module ACG8069

Programming can be done only when the gate is stationary.

1 - Set **DIP 1** to ON and then **DIP 3** to ON. DL12 flashes green for 10 seconds.
2 - Press the transmitter button (usually channel B) within the allotted 10 seconds. If the transmitter is properly memorized LED DL12 blinks red and the buzzer emits a tone. The 10 seconds are automatically renewed (DL12 flashes green) in order to memorize next transmitter.
3 - To finish programming wait 10 seconds, or press the PROG button briefly. The LED DL12 stops flashing.
4 - Reset **DIP 1** to OFF and **DIP 3** to OFF.
5 - End of procedure.

ALL RADIO CODES FOR PEDESTRIAN OPENING CANCELLATION PROCEDURE

Cancellation can only be performed when the gate is stationary.

1 - Set **DIP 1** to ON and then **DIP 3** to ON. LED DL12 flashes green for 10 seconds.
2 - Press and hold the PROG button for 5 seconds. Memory cancellation is indicated by two red flashes of LED DL12 and two tones of the buzzer.
3 - The red LED DL1 remains active and you can add new codes as shown above.
4 - Reset **DIP 1** to OFF and **DIP 3** to OFF.
5 - End of procedure.

RADIO CODES MEMORY FULL INDICATOR (FOR PEDESTRIAN OPENING)

Indication is visible only when gate is stationary.

1 - Set **DIP 1** to ON and then **DIP 3** to ON.
2 - LED DL12 flashes green 6 times if the memory is full (1000 codes). LED DL12 blinks red for 10 seconds enabling possible cancellation of codes.
3 - Set **DIP 1** to OFF and **DIP 3** to OFF.
4 - End of procedure.

»OPERADOR ELECTROMECANICO PARA PUERTAS ABATIBLES Y CORREDIZAS TELESCOPICAS INDUSTRIALES MOD.R-50.

H - PROGRAMMING RADIO CODES (FOR R-AUX RELAY) (1000 CODES MAX) - with radio module ACG8069

*** Remote control management can be enabled only by the RIB GATE app.**
R-AUX normally works as a courtesy light for 3 minutes.
Through the RIB GATE app it is possible to configure the operation of this relay as desired.

Programming can be done only when the gate is stationary.

1 - Set **DIP 1** to ON, **DIP 2** to ON and then **DIP 3** to ON. DL12 flashes orange for 10 seconds.
2 - Press the transmitter button (usually channel C) within the allotted 10 seconds. If the transmitter is properly memorized LED DL12 blinks green and the buzzer emits a tone. The 10 seconds are automatically renewed (DL12 flashes orange) in order to memorize next transmitter.
3 - To finish programming wait 10 seconds, or press the PROG button briefly. The LED DL12 stops flashing.
4 - Reset **DIP 1, 2 and 3** to OFF.
5 - End of procedure.

RADIO CODES CANCELLATION PROCEDURE (FOR R-AUX RELAY)

Cancellation can only be performed when the gate is stationary.

1 - Set **DIP 1** to ON, **DIP 2** to ON and then **DIP 3** to ON. LED DL12 flashes green for 10 seconds.
2 - During these 10 seconds press and hold the PROG button for 5 seconds. Memory cancellation is indicated by two green flashes of LED DL12 and two tones of the buzzer.
3 - LED DL12 blinks orange again for 10 seconds and you can add new codes as shown above.
4 - Re-Set **DIP 1, 2, 3** to OFF.
5 - End of procedure.

»OPERADOR ELECTROMECANICO PARA PUERTAS ABATIBLES Y CORREDIZAS TELESCOPICAS INDUSTRIALES MOD.R-50.

RADIO CODES MEMORY FULL INDICATOR (FOR R-AUX RELAY)

Indication is visible only when gate is stationary.

1 - Set **DIP 1** to ON, **DIP 2** to ON and then **DIP 3** to ON.
2 - LED DL12 flashes green 6 times if the memory is full (1000 codes). LED DL12 blinks red for 10 seconds enabling possible cancellation of codes.
3 - Re-Set **DIP 1, 2, 3** to OFF.
4 - End of procedure.

FUNCTIONING OF CONTROL ACCESSORIES

STEP-BY-STEP BUTTON (COM A+/START)

DIP 6 ON => It cyclically performs the commands open-stop-close-stop-open etc.
DIP 6 OFF => Opens the gate when closed. There is no effect if activated while opening. If activated when gate is open, the gate closes. If activated while closing, the gate re-opens.

OPEN BUTTON (COM A+/OPEN)

The button controls the opening movement when the gate is stationary. If activated while closing, it re-opens the gate.

B.I.O. BUTTON - OPENS WITH CLOCK FEATURE (COM A+/B.I.O.)

This function is useful during peak hours, when vehicle traffic is slow (e.g. entry/exit of workers, emergencies in parking or residential areas and, temporarily, for moving operations). By connecting a switch and/or a daily/weekly clock to COM A+/B.I.O., you can open and keep the automation open for as long as the switch is pressed or the clock remains active. When the gate is open, all the commands are ignored.
Releasing the switch or at the end of the set time, the automation closes immediately.

CLOSE BUTTON (COM A+/CLOSE)

Controls the closing movement when the gate is stationary.

TRANSMITTER

DIP 6 ON => It cyclically performs the commands open-stop-close-stop-open etc.
DIP 6 OFF => Opens the gate when closed. There is no effect if activated while opening. If activated when gate is open, the gate closes. If activated while closing, the gate reopens.

»OPERADOR ELECTROMECANICO PARA PUERTAS ABATIBLES Y CORREDIZAS TELESCOPICAS INDUSTRIALES MOD.R-50.

ELECTRIC LOCK (COM A+/LOCK-)

Set **DIP 8** to ON to enable control of the electric lock when opening.

PULSE TO RELEASE THE ELECTRIC LOCK IN OPENING

Set **DIP 9** to ON to enable the electric lock pulse release when opening (provided **DIP 8** is ON).

If a command to open the gate is given when the gate is closed, the closing movement is performed for 0.5 seconds and the electric lock is simultaneously activated (followed by a 0.5 second pause and then the opening of the gate).

MOTORS MANUAL RELEASE FACILITATION

Set **DIP 10** to ON to enable easy manual release. As gate is closed a reverse motion with a fixed time of 0.2 seconds occurs to facilitate the motor manual release.

PULSE TO ENGAGE THE ELECTRIC LOCK IN CLOSURE

Set **DIP 11** to ON to enable the pulse engagement of the electric lock when closing. Upon closing, motors are activated for 1 second at full voltage to ensure lock engagement.

MOTORS MANUAL RELEASE FACILITATION

Set **DIP 10** to ON to enable easy manual release. As gate is closed a reverse motion with a fixed time of 0.2 seconds occurs to facilitate the motor manual release.

PULSE TO ENGAGE THE ELECTRIC LOCK IN CLOSURE

Set **DIP 11** to ON to enable the pulse engagement of the electric lock when closing. Upon closing, motors are activated for 1 second at full voltage to ensure lock engagement.

»OPERADOR ELECTROMECANICO PARA PUERTAS ABATIBLES Y CORREDIZAS TELESCOPICAS INDUSTRIALES MOD.R-50.

OPERATION OF SAFETY ACCESSORIES

PHOTOCELLS (COM A+/PHOT 1, COM A+/PHOT 2)

NOTE: the transit through the photocells is signaled by a buzzer tone

DIP 4 OFF => if an obstacle is placed in range of the photocells when the gate is closed, the gate does not open. During operation, photocells work when opening (by starting the opening movement only after the obstacle is removed) and closing (by starting the reverse movement only after the obstacle is removed).

DIP 4 ON => if an obstacle is placed in range of the photocells when the gate is closed and the command to open is given, the gate opens (the photocells do not work while opening). Photocells work only during closing (with reverse motion restored after a second, even if they are still engaged).

ATTENTION: In case the receiver led remains lit, malfunctioning of the main supply is suspected.

It is advisable to connect electrically to earth the columns or the photocells stands to the terminal A -, to shield the photocells from external noise.

Be careful not to short circuit the system when the supply phases are inverted!

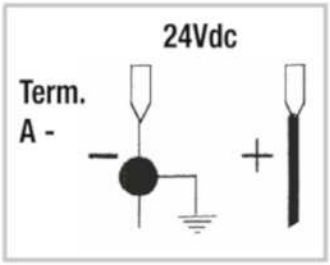

MONITORING OF PHOTOCELLS (A+ TEST A-)

Connect the photocell transmitter to A+ TEST/A- and set **DIP 7** to ON.

The monitoring consists of a functional test of the photocell run before every movement.

The gate movement is therefore permitted only if the photocells have passed the functional test.

CAUTION: MONITORING OF THE PHOTOCELLS INPUTS (PHOTO 1/PHOTO 2) CAN BE ACTIVATED WITH **DIP 7** ON OR DEACTIVATED WITH **DIP 7** OFF.

WARNING: If the AUTOTEST feature is enabled and only one photocell is connected, a jumper must be made between the PHOT 1 and PHOT 2 terminals. If the jumper is not made, the AUTOTEST fails and the gate will not move.

»OPERADOR ELECTROMECANICO PARA PUERTAS ABATIBLES Y CORREDIZAS TELESCOPICAS INDUSTRIALES MOD.R-50.

PHOTOCELL AUTOTEST ALARM (DIP 7 ON)

If the photocell fails the monitoring test, an alarm is displayed by the blinker lighting up and gate movement is not allowed. Normal operation can be restored only by repairing the photocell and pressing one of the controls.

EDGES (SAFETY STRIPS) (COM A+/EDGE 1, COM A+/EDGE 2)

If engaged when closing, EDGE 1 reverses the motion in opening. If edge remains engaged, it doesn't permit the closing.
If engaged during opening, EDGE 2 reverses the motion in closing. If edge remains engaged, it doesn't permit the opening.
If edges are not used, jump the terminals COM A+/EDGE1/EDGE2.

EDGE ALARM

Flasher and buzzer are activated with 2 tones every 5 seconds for one minute.

STOP BUTTON (COM A+/STOP)

The STOP button stops the gate during any operation.

If held when the gate is fully open (or partially when using the pedestrian control) automatic closing is temporarily deactivated (if activated by the TCA trimmer and LED DL11 on). It is therefore necessary to use a new command to make it close.
The automatic closing function is reactivated on the next cycle (if activated by the TCA trimmer and LED DL11 ON).

»OPERADOR ELECTROMECANICO PARA PUERTAS ABATIBLES Y CORREDIZAS TELESCOPICAS INDUSTRIALES MOD.R-50.

FUNCTIONING IN HOLD-TO-RUN MODE WHEN THE SAFETY DEVICES ARE FAILING

If one of the safety edges fails or remains engaged for more than 5 seconds, or if one of the photocells fails or remain engaded for more than 60 seconds, the OPEN, CLOSE, START and PED. commands will work only in hold-to-run mode.

The signal that this mode has been activated is given by the blinking of the programming led DL1.

The radio commands and the automatic closing will be excluded, since their use in this mode is not allowed by the norms.

Once the failing safety device is repaired, in automatic after 1 second, all standard commands functioning again so radio commands and the automatic closing will be enabled again.

Note 1: during this functioning in hold-to-run mode, in case of damage to the safety strips (or photocells) the photocells (or safety strips) still work by interrupting the operation in progress.

Note 2: the stop command is not to be considered a safety command that can be bypassed in this mode. Therefore, when pressed or damaged, it will not allow any movement of the gate.

The hold-to-run mode is only an emergency operation which must be activated for a very short period and with the complete installation at sight so to have a secure and safe control of the system. As soon as possible however, the failing safety devices must be repaired and activated.

VISUAL AND SOUND ALARMS

BLINKER

Connect the flashing light to the blinker output. Use flashing lights ACG7059 and bulbs of 40W maximum.

PRE-BLINKING

DIP 5 - OFF => motor and blinker start simultaneously.
DIP 5 - ON => blinker starts 3 seconds before the motor.

BUZZER

It has the task to signal the intervention of the security, the anomalies and the memorization and cancellation of the radio codes.

»OPERADOR ELECTROMECANICO PARA PUERTAS ABATIBLES Y CORREDIZAS TELESCOPICAS INDUSTRIALES MOD.R-50.

TECHNICAL SPECIFICATIONS

- Temperature range	-10 ÷ + 55°C
- Humidity	< 95% without condensation
- Power supply voltage	230 o 120V~ ±10%
- Frequency	50/60 Hz
- Maximum absorption	45 mA
- Power supply microinterruptions 100ms	
- Maximum power SIGNAL output	24 Vdc 3W
- Maximum load of blinker output	40W with resistive charge
- Current available for photocells and accessories	500mA 24 Vdc
- Current available on radio connector	200mA 24 Vdc

TECHNICAL RADIO SPECIFICATIONS (model B2-CRX)

- Reception frequency	433,92 MHz
- Impedence	52 ohm
- Sensitivity	>1 µV
- Feedback control	PLL
- Memory storage (codes)	1000

- All the inputs must be used as clean contacts because the power supply is generated internally (safe voltage) in the card and it is set in a way to guarantee the use of the double insulation and reinforced in relation to parts with hazardous voltage.
- Any external circuits connected to the outputs of the control board, must be carried out to make sure the double or reinforced insulation is used in relation to parts with hazardous voltage.
- All the inputs are run by a programmed integrated circuit which carries out a self-check at the beginning of each operation.

»OPERADOR ELECTROMECANICO PARA PUERTAS ABATIBLES Y CORREDIZAS TELESCOPICAS INDUSTRIALES MOD.R-50.

SIGNAL - 24Vdc GATE OPEN WARNING LIGHT (COM A+/SIGNAL-)

Signals when the gate is open, partially open or not closed completely. It turns off only when the gate is completely closed.
During opening, it flashes slowly.
When the gate is stationary or opened, it is permanently on.
During closing, it flashes quickly

N.B.: Max 3 W. If warning lights are in excess, the control panel processes will be endangered with possible stop of all operations.

OPERATION AFTER A BLACK-OUT

When the power supply comes back the DL1 led turns on and remains on for all the time the gate stays open. The led will turn off only once the gate is completely opened or closed. It is recommended to fully open the gate. Let the gate close by itself or with automatic closing, or wait until the blinker stops flashing before commanding it to close.
This will allow the gate to realign. If, motors were released and moved from the normal position when closed during the blackout, the first movement after power returns must be complete.
If the black out occurs when the gate is still moving or when the gate is open and the first command sent after the black out is a closing command, the closing of the gate will be carried out with a total delay between the two gate leaves. Therefore, first the leaf M2 will close completely; once it is off, M1 will start closing. This separate movement of the two gate leaves is done to avoid their incorrect overlapping.

»OPERADOR ELECTROMECANICO PARA PUERTAS ABATIBLES Y CORREDIZAS TELESCOPICAS INDUSTRIALES MOD.R-50.

TECHNICAL SPECIFICATIONS

- Temperature range	-10 ÷ + 55°C
- Humidity	< 95% without condensation
- Power supply voltage	230 o 120V~ ±10%
- Frequency	50/60 Hz
- Maximum absorption	45 mA
- Power supply microinterruptions 100ms	
- Maximum power SIGNAL output	24 Vdc 3W
- Maximum load of blinker output	40W with resistive charge
- Current available for photocells and accessories	500mA 24 Vdc
- Current available on radio connector	200mA 24 Vdc

TECHNICAL RADIO SPECIFICATIONS (model B2-CRX)

- Reception frequency	433,92 MHz
- Impedence	52 ohm
- Sensitivity	>1 µV
- Feedback control	PLL
- Memory storage (codes)	1000

- All the inputs must be used as clean contacts because the power supply is generated internally (safe voltage) in the card and it is set in a way to guarantee the use of the double insulation and reinforced in relation to parts with hazardous voltage.
- Any external circuits connected to the outputs of the control board, must be carried out to make sure the double or reinforced insulation is used in relation to parts with hazardous voltage.
- All the inputs are run by a programmed integrated circuit which carries out a self-check at the beginning of each operation.

V07.20

»OPERADOR ELECTROMECANICO PARA PUERTAS ABATIBLES Y CORREDIZAS TELESCOPICAS INDUSTRIALES MOD.R-50.

TROUBLE SHOOTING

After having carried out all connections, by carefully following the layout and having positioned the gate in intermediate position, check the correct ignition of red LEDS DL6, DL7, DL8, DL9 and DL10.

In case of no ignition of the LEDS, always with gate in intermediate position, check the following and replace any faulty components.

DL6 OFF Stop button malfunction (if Stop is not connected, perform the jump between COM A+ and STOP).

DL7 or DL8 OFF Faulty photocells (In case the edge is not connected, carry out jumper between COM A+ and PHOTO 1/PHOTO 2)

DL9 or DL10 OFF Faulty safety edge (In case the edge is not connected, carry out jumper between COM A+ and EDGE 1/EDGE 2)

During functioning with personnel present, with **DIP 1** at ON, check that during opening of M1 and M2 the green DL2 and DL4 LEDS switch on and that during closing of M1 and M2 the red DL3 and DL5 LEDS switch on.

Or else, reverse the wires of the motor.

LED DL13 (BLUE) ON Some functions are enabled via smartphone, so via smartphone check the card functions as the dips/trimmers status may not be true.

On the board there are resettable fuses which intervene in the event of a short circuit, interrupting the output assigned to them.

In the event of troubleshooting, it is advisable to disconnect all the removable connectors and insert them one at a time in order to more easily identify the cause of the fault.

»OPERADOR ELECTROMECANICO PARA PUERTAS ABATIBLES Y CORREDIZAS TELESCOPICAS INDUSTRIALES MOD.R-50.

TABLE SUMMARISING VISUAL AND SOUND ALARMS SIGNALS DURING PROGRAMMING SEQUENCE			
EVENT	**BUZZER STATUS**	**FLASHER STATUS**	**DL1 LED STATUS**
DIP 1 ON (hold-to-run mode) Or failure of a safety device	Off	Off	Flashes on-off 250 ms
DIP 2 ON (full stroke programming)	Off	Off	Flashes on-off 500 ms
DIP 2>1 ON (pedestrian stroke programming)	Off	Off	Flashes on-off 500 ms
Programming sequence stopped due to intervention of a safety device	10 seconds tone with 2 seconds pause	Off	On steady
EVENT	**BUZZER STATUS**	**FLASHER STATUS**	**DL12 LED STATUS**
No transmitter code entered	Off	Off	Flashes intermittently red/green
DIP 1 > 2 - transmitter code programming for full opening	Off	Off	Flashes red for 10 seconds
DIP 1 > 3 - transmitter code programming for pedestrian opening	Off	Off	Flashes green for 10 seconds
DIP 1>2> 3 - transmitter code programming for R-AUX relay	Off	Off	Flashes orange for 10 seconds
Correct transmitter codes programming for full opening and R-AUX relay	1 Tone	Off	Turns green once
Correct transmitter codes programming for pedestrian opening	1 Tone	Off	Turns red once
Remote control code not present in memory	Off	Off	Red flash
Memory saturated by remote control codes (1000 codes saved)	Off	Off	Runs 6 green flashes
Radio code deletion for full opening, pedestrian opening, R-AUX relay	2 Tones	Off	Runs 2 green flashes

FAULT	SOLUTION
After having carried out the various connections and having supplied voltage, all the LEDS are switched off.	**On the board there are resettable fuses which intervene in the event of a short circuit, interrupting the output assigned to them.** **In the event of troubleshooting, it is advisable to disconnect all the removable connectors and insert them one at a time in order to more easily identify the cause of the fault.** Check the integrity of fuse F1. If the fuse is blown, use only a suitable replacement. F1 = T 5A MOTOR PROTECTION FUSE
The motor opens and closes, but it has no strength and moves slowly.	Check trimmers TORQUE and LOW-SPEED adjustment.
The gate opens but does not close after the time set.	Make sure that the TCA trimmer is activated with LED DL6 ON. B.I.O. contact always on => check the status of the clock connected to B.I.O.. Photocells Auto-test failed => check the connections between the control panel and the photocells.
The gate does not open or close by activating the various START, RADIO, OPEN and CLOSE buttons.	Stop, Edge or Photocell with **DIP 4** OFF contact fault => Fix or replace the faulty contact. Photocells Auto-test failed => check the connections between the control panel and the photocells.
The electric lock does not work.	Ensure to have enabled **DIP 8** at ON. Check the cable.
The buzzer emits 2 long tones and the gate does not move	Safety edge with 8,2 KΩ resistor. Remove the resistor or configure the EDGE input via the RIB GATE app
The remote control does not work. Led DL12 lit red	Lack of radio module in connector J5 or faulty radio module.

AUTOMATISMI PER CANCELLI
AUTOMATIC ENTRY SYSTEMS

A·D·S AUTOMATIC DOOR SPECIALISTS

Puertas & Portones Automáticos, S.A. de C.V.
¡Nuestra pasión es la Solución!....

»OPERADOR ELECTROMECANICO PARA PUERTAS ABATIBLES Y CORREDIZAS TELESCOPICAS INDUSTRIALES MOD.R-50.

ACCESSORIES

For the connections and the technical data of the optional equipments follow the relevant handbooks.

RADIO TRANSMITTER SUN

SUN 2CH	cod. ACG6052	SUN 4CH	cod. ACG6054
SUN CLONE 2CH	cod. ACG6056	SUN CLONE 4CH	cod. ACG6058
SUN-PRO 2CH	cod. ACG6210	SUN-PRO 4CH	cod. ACG6214
SUN-PROX 2CH	cod. ACG6220	SUN-PROX 4CH	cod. ACG6224

RADIO MODULE 433MHz

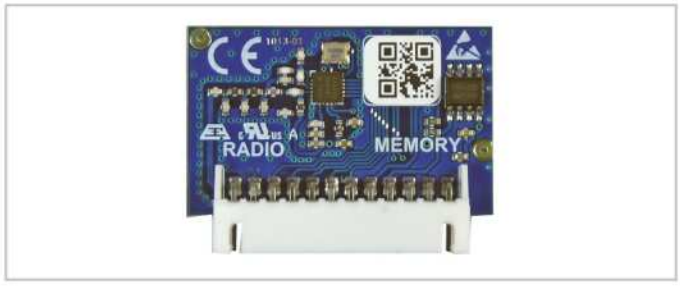

code ACG8069

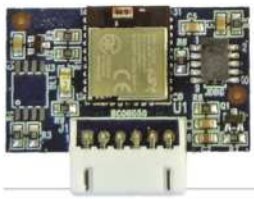

APP8050 APP card
to manage the control panel using Bluetooth 4.2 transmission

APP8054 APP+ card
to manage the control panel using Bluetooth 4.2 transmission

APP8064 Wi-Fi module for APP+ card
to manage the control panel using the local Wi-Fi network (WLAN)

APP8066 RJ45 module for APP+ card
to manage the control panel using the local network (LAN)

APP8060 Clock module for APP+ card
to add access control features to the control panel

V07.20

(229) 288-1552
portonesautomaticos@adsver.com.mx
portonesautomaticos@prodigy.net.mx

RESIDENCIAL COMERCIAL INDUSTRIAL

MEMBER IDA International Door Association

AUTOMATISMI PER CANCELLI
AUTOMATIC ENTRY SYSTEMS

A·D·S AUTOMATIC DOOR SPECIALISTS

Puertas & Portones Automáticos, S.A. de C.V.
¡Nuestra pasión es la Solución!....

»OPERADOR ELECTROMECANICO PARA PUERTAS ABATIBLES Y CORREDIZAS TELESCOPICAS INDUSTRIALES MOD.R-50.

SPARK

In order to make the systems mentioned above give the best performances, you need to install an antenna tuned on the frequency of the radio receiver installed.
N.B. Pay attention to not let the central wire of the cable to came Into contact with the external copper sheath, since this would prevent the antenna from working.
Install the antenna vertically and in such a way the remote control can reach it.

SPARK BLINKER WITH IN-BUILT INTERMITTENT CARD	code ACG7059
LATERAL SUPPORT	code ACG7042
SPARK ANTENNA 433	code ACG5452

FIT SLIM

PHOTOCELLS for the wall-installation	code ACG8032
PAIR OF COLUMNS FOR FIT SLIM	code ACG8065

FIT SLIM photocells have synchronism function in AC current and ranges of 20 m.
You can fit many couples close together thanks to the synchronising circuit.
Add the **SYNCRO TRANSMITTER TX SLIM SYNCRO** code ACG8029 for more than 2 photocells couples (up to 4).

MECHANICAL BOLT

For 2-leaf gates to latch closed gate to the ground. code ACG5000

ELECTRIC LOCK

Horizontal lock - right external view - 12Vac	code ACG8660
Horizontal lock - left external view - 12Vac	code ACG8670
Vertical lock - 12Vac	code ACG8650

TOUCH

MECHANICAL SAFETY STRIP L = 2 m
CERTIFIED EN 13849-2 (2008) CATEGORY 3
code ACG3015

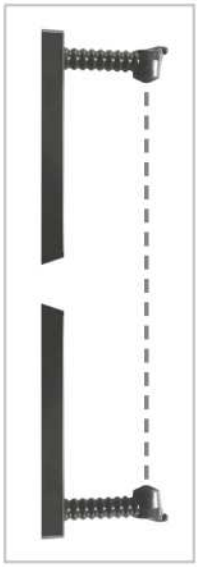

VERTIGO

PHOTOCELLS SUBSTITUTING THE SAFETY STRIP
CERTIFIED EN 12978 - EN 13849-2 PL "c" CAT 2

VERTIGO 8	cod. ACG8044
VERTIGO 10	cod. ACG8045
VERTIGO WIRELESS 8	cod. ACG8061
VERTIGO WIRELESS 10	cod. ACG8062

Applicable vertically and horizontally to sliding and swing gates.

V07.20

RESIDENCIAL COMERCIAL INDUSTRIAL

MEMBER IDA International Door Association

(229) 288-1552
portonesautomaticos@adsver.com.mx
portonesautomaticos@prodigy.net.mx

»OPERADOR ELECTROMECANICO PARA PUERTAS ABATIBLES Y CORREDIZAS TELESCOPICAS INDUSTRIALES MOD.R-50.

CONEXIONES FOTOCELDAS

2 fotocélulas FIT SLIM, FIT SYNCRO con autotest

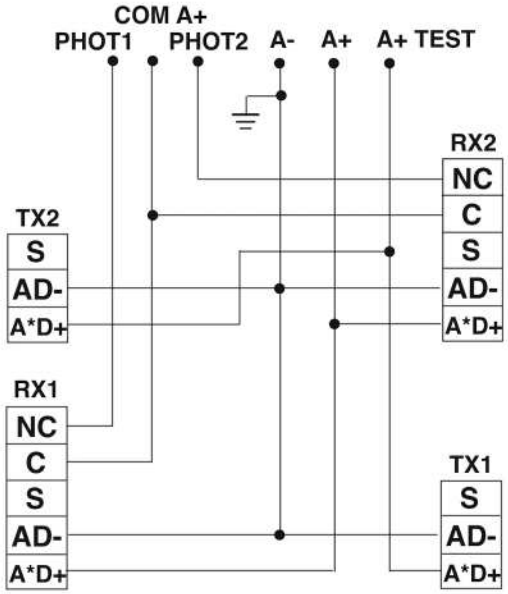

4 fotocélulas FIT SLIM / FIT SYNCRO con autotest y sincronizador de señal infrarroja

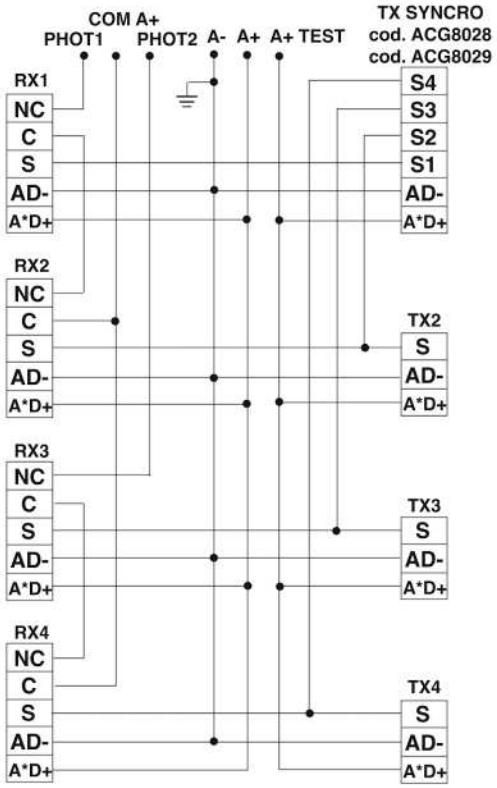

2 fotocélulas F97P, F97I con autotest

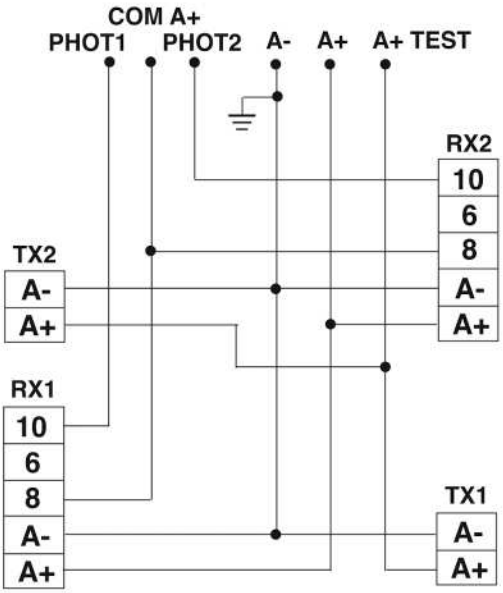

2 fotocélulas FIT METAL con autotest

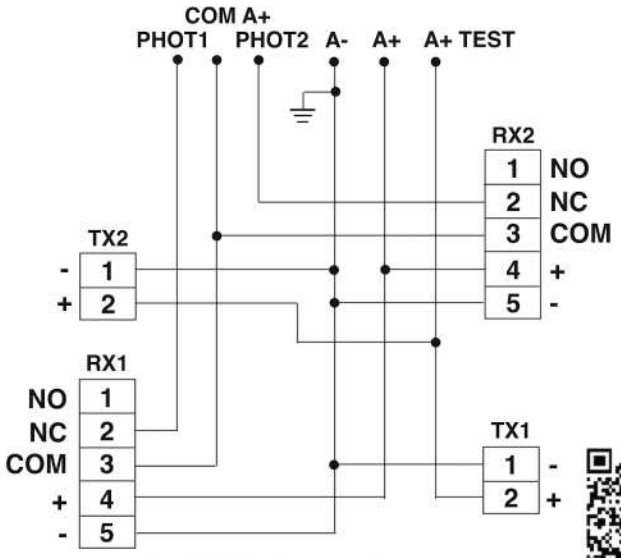

»OPERADOR ELECTROMECANICO PARA PUERTAS ABATIBLES Y CORREDIZAS TELESCOPICAS INDUSTRIALES MOD.R-50.

CONEXIONES FOTOCELDAS

4 fotocélulas NOVA sincronizadas con autotest

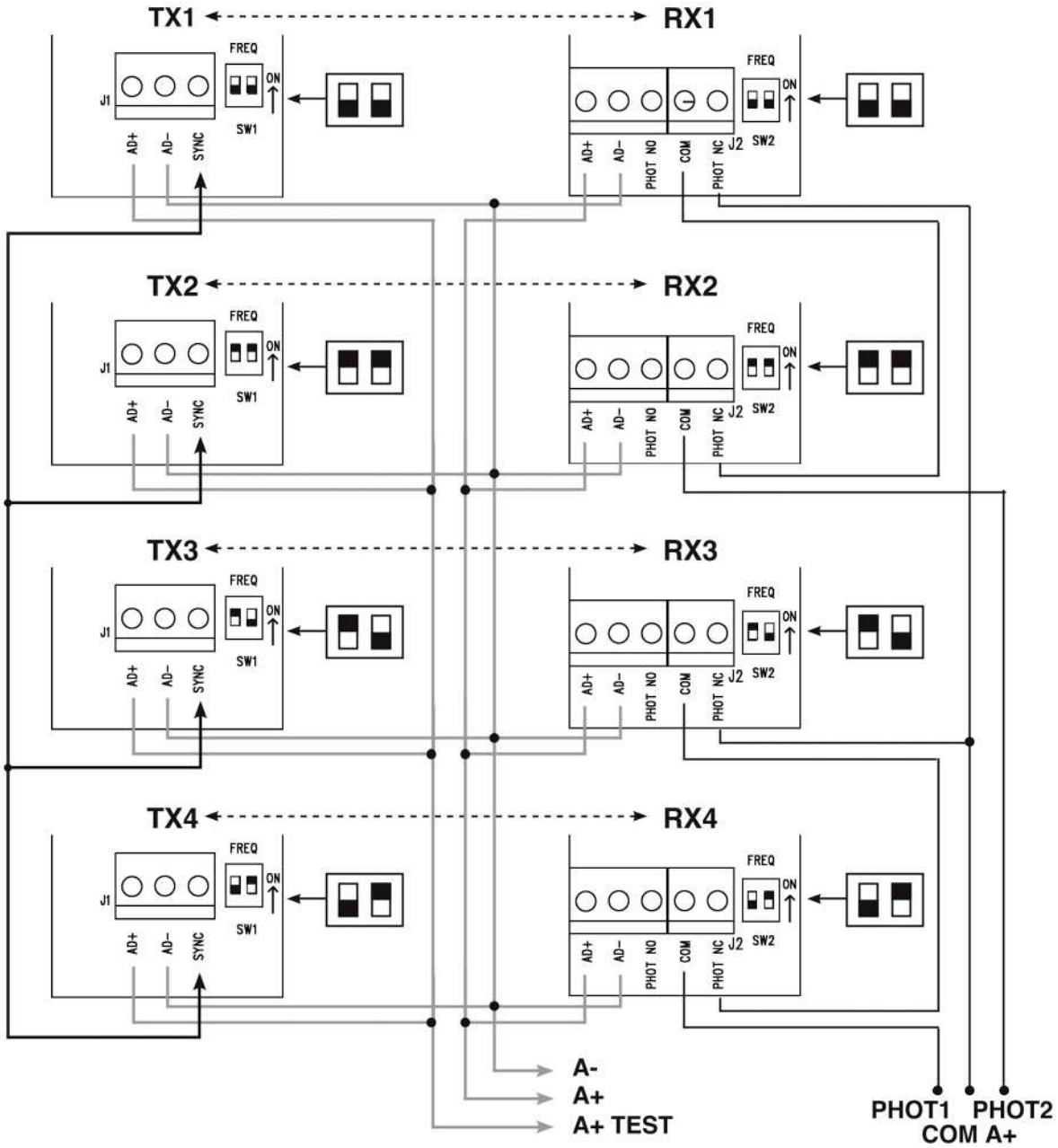

ADVERTENCIA: Si la función AUTOTEST está activada y solo se conecta una fotocélula, se debe hacer un puente entre los terminales PHOT 1 y PHOT 2. Si el puente no se ejecuta, la autoprueba falla y la puerta no se moverá.

»OPERADOR ELECTROMECANICO PARA PUERTAS ABATIBLES Y CORREDIZAS TELESCOPICAS INDUSTRIALES MOD.R-50.

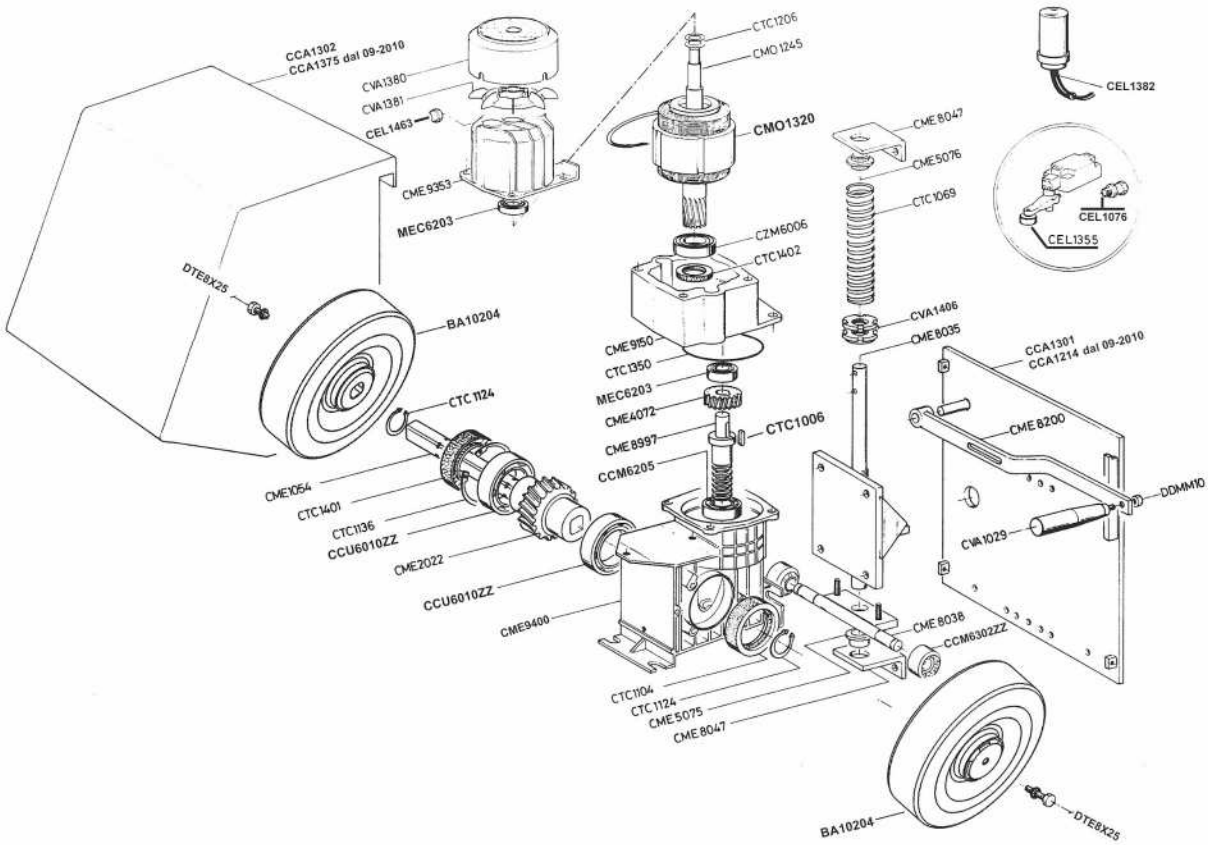

Codice	Denominazione Particolare				
BA10204	Ruota trascinamento R50	CME5075	Bussola inf. R50	CTC1124	Seeger E28
CCA1301	Piastra di base	CME5076	Bussola sup. R50	CTC1136	Seeger I 80
CCA1214	Piastra di base dal 09-2010	CME8035	Supporto motore R50	CTC1206	Molla a tazza
CCA1302	Carter	CME8038	Timone regolab. R50	CTC1350	Anello di tenuta
CCA1375	Carter dal 09-2010	CME8047	Squadretta di guida R50	CTC1401	Paraolio 50x80x8
CCU6010ZZ	Cuscinetto schermato	CME8200	Leva di sblocco manuale R50	CTC1402	Paraolio30x47x7
MEC6203	Cuscinetto schermato	CME8997	Vite senza fine	CVA1029	Manopola MCG 28 85 GIR
CCM6205	Cuscinetto schermato	CME9150	Controflangia	CVA1380	Copriventola motore
CEL1076	Pressacavo PG13.5	CME9353	Cappellotto	CVA1381	Ventola
CEL1463	Blocca Cavo SR6P3-4	CME9400	Carcassina	CVA1406	Ghiera reg. friz. Prem.
CEL1355	Finecorsa 3SE3120-1G	CMO1245	Rotore con albero	CZM6006	Cuscinetto motore 6006ZZ
CEL1382	Condensatore 16µF 450V	CMO1320	Statore 230V 50/60Hz 1P	DDMM10	Dado 10MA medio
CME1054	Albero di traino	CCM6302ZZ	Cuscinetto 6302ZZ	DTE8X25	Vite TE 8X25 UNI5739
CME2022	Corona con mozzi Z=38	CTC1006	Chiavetta 6x6x20		
CME4072	Ingranaggio Z=29	CTC1069	Molla per R50		
		CTC1104	Paraolio 50x72x10		

V07.20

RIB
AUTOMATISMI PER CANCELLI
AUTOMATIC ENTRY SYSTEMS

A·D·S AUTOMATIC DOOR SPECIALISTS
Puertas & Portones Automáticos, S.A. de C.V.
¡Nuestra pasión es la Solución!....

»OPERADOR ELECTROMECANICO PARA PUERTAS ABATIBLES Y CORREDIZAS TELESCOPICAS INDUSTRIALES MARCA RIB MOD.R-50.

A·D·S AUTOMATIC DOOR SPECIALISTS

Puertas & Portones Automáticos, S.A. de C.V.

¡Nuestra pasión es la Solución!....

V08.18

(229) 288-1552
portonesautomaticos@adsver.com.mx
portonesautomaticos@prodigy.net.mx

RESIDENCIAL COMERCIAL INDUSTRIAL

MEMBER IDA International Door Association